NUURA

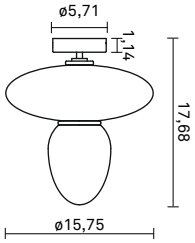

RIZZATTO 42

Design: Paolo Rizzatto, 2021. US-model.

The Rizzatto collection comprises two pendants and a ceiling light. The organic shapes created by mouth-blown glass are one feature all three have in common.
The pendants comprise brass-coloured anodised aluminium and mouth-blown glass. The light unfolds from its source, and diffuses wonderfully through the opal-white glass, creating soft, comfortable quality lighting. Two of the pendants are height-adjustable, making them versatile for use in private homes or public places. The ceiling light is mounted directly on the ceiling, making it possible to create unique, decorative ceiling lighting.

Rizzatto 42, gives a soft and even light, making it ideal to place in the bedroom, the kitchen or the hallway.

Rizzatto collection
The Rizzatto collection include the following products:

- **Rizzatto 32:** Satin Brass - Opal White
- **Rizzatto 42:** Satin Brass - Opal White
- **Rizzatto 43:** Satin Brass - Opal White

TECHNICAL INFO

Product no.: 92640424

Type: Ceiling light - Indoor

Colour:
Glass: Opal White
Metal: Satin Brass

Materials:
Coated metal
Mouth-blown glass

Dimensions:
ø15,75in x 17,68in
Weight: 3450 g

Packaging:
Dimensions: L: 19,29in x W: 9,45in x H: 26,18in
Weight: 1210 g
Total weight incl. product: 4660 g
Number of parcels: 1
Material: Brown cardboard.

Packaging - weight - material:
Cardboard outside: - g
Cardboard inside: - g
Bubble wrap: - g
Plastic bag: - g
Styrofoam: - g

Cleaning:
Use a soft dry cloth to clean the product.
Do not use household cleaners.

Certifications and labels:

CE - CE-certified
IP Rating - IP20
- Class I
- ETL-listed

Light source:
Socket: E26
Max wattage: 20W LED
Voltage (V): 120V

Bulb not included

Dimmable if installed with appropriate dimmable LED light source suitable for your dimmer circuit.
Light source can be added to delivery on request or via our webshop, nuura.com.

For DALI compatibility, we recommend to use the Hytronik Trailing Edge Dimmer (HDD2200 DALI Dimmer) and our recommended light sources.
HDD2200 DALI Dimmer can be added to delivery on request.

Safety instructions

Important! Before commencing installation work disconnect the main cable from the power supply - remove fuse or turn switch to “OFF”!

1. Installation should be carried out in accordance with the local safety regulations.
2. In order to prevent damage, please check walls for cables before drilling holes.
3. Please ensure that all electrical connections (even preassembled lamps) are screwed tightly or are fully inserted as good contact is essential for a long life-span at high currents. Please check for tight connections after changing or adjusting lamps. Screwed connections must be tightened after 20 minutes.
4. Please do not place objects on your system (e.g. for decorative purposes) if they were not delivered with the system.
5. The lamps get very hot when in use. Please allow lamps to cool down before touching.
6. Do not change lamps or spots when switched on.
7. System should not be enlarged with additional lamps.
8. We reserve the right to make technical alterations.

Please keep these instructions.

Fitting: E27
Use of a dimmer is highly recommended
(Must be compatible with type of bulb.)

The glass used for this lamp is hand-blown.
Only 1st. quality has been chosen.
Air bubbles and variations in thickness and colour is normal.

NUURA
www.nuura.com
info@nuura.com

CE

© 2019 All rights reserved

Rizzatto 32

Assembly Instructions

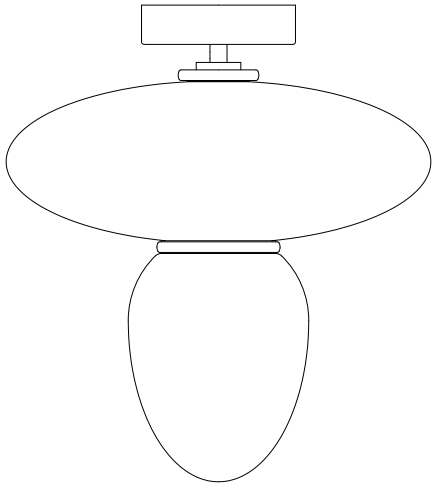

NUURA

© 2019 All rights reserved

1

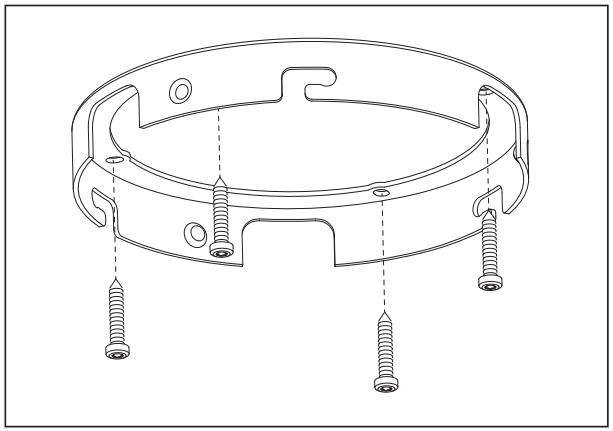

Mount the top plate to the ceiling with screws.

Please make sure it is fixated properly.

2

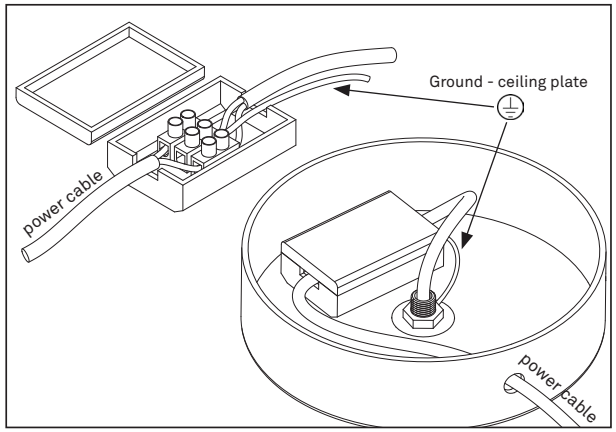

Install the power cable by leading it through either the top or the side of the ceiling plate into the cable connector.

3

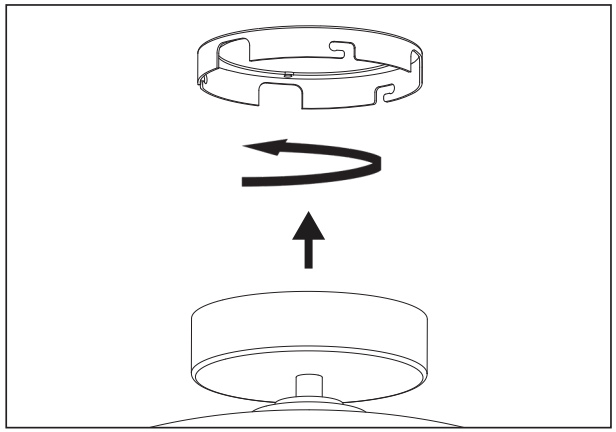

Attach the lamp to the top plate by turning the lamp.

4

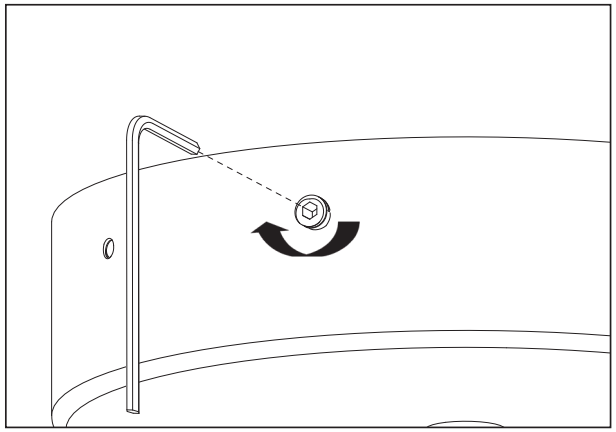

Fixate with the socket screw. Install the socket screw with the Allen key provided.

NB: Please use only correct provided Allen key.

Please make sure everything is fixated properly.

5

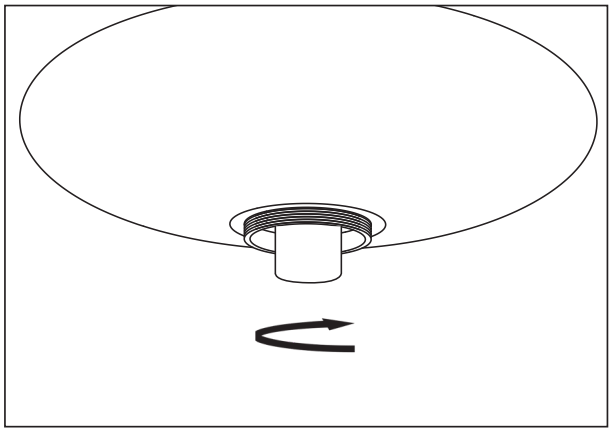

Screw the light bulb into the socket.

6

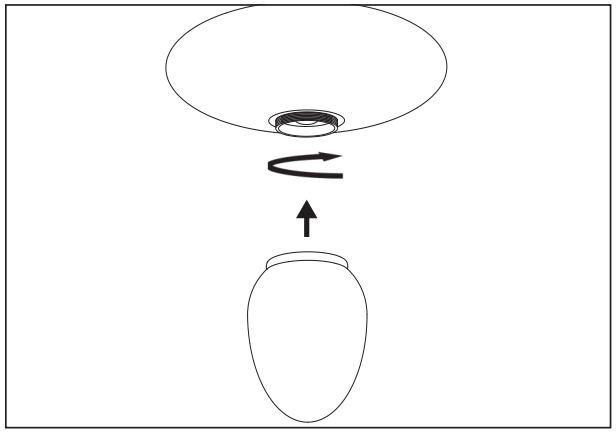

Take the lower glass and carefully place it over the light bulb and socket.
Fixate it by turning the glass clockwise.
Please make sure they are fixated properly.

7

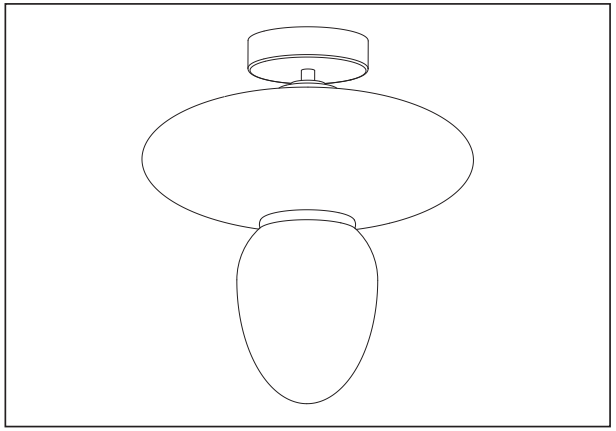

Completed.